StockMotors

AC motors 90W to 315kW

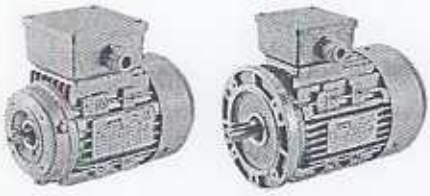

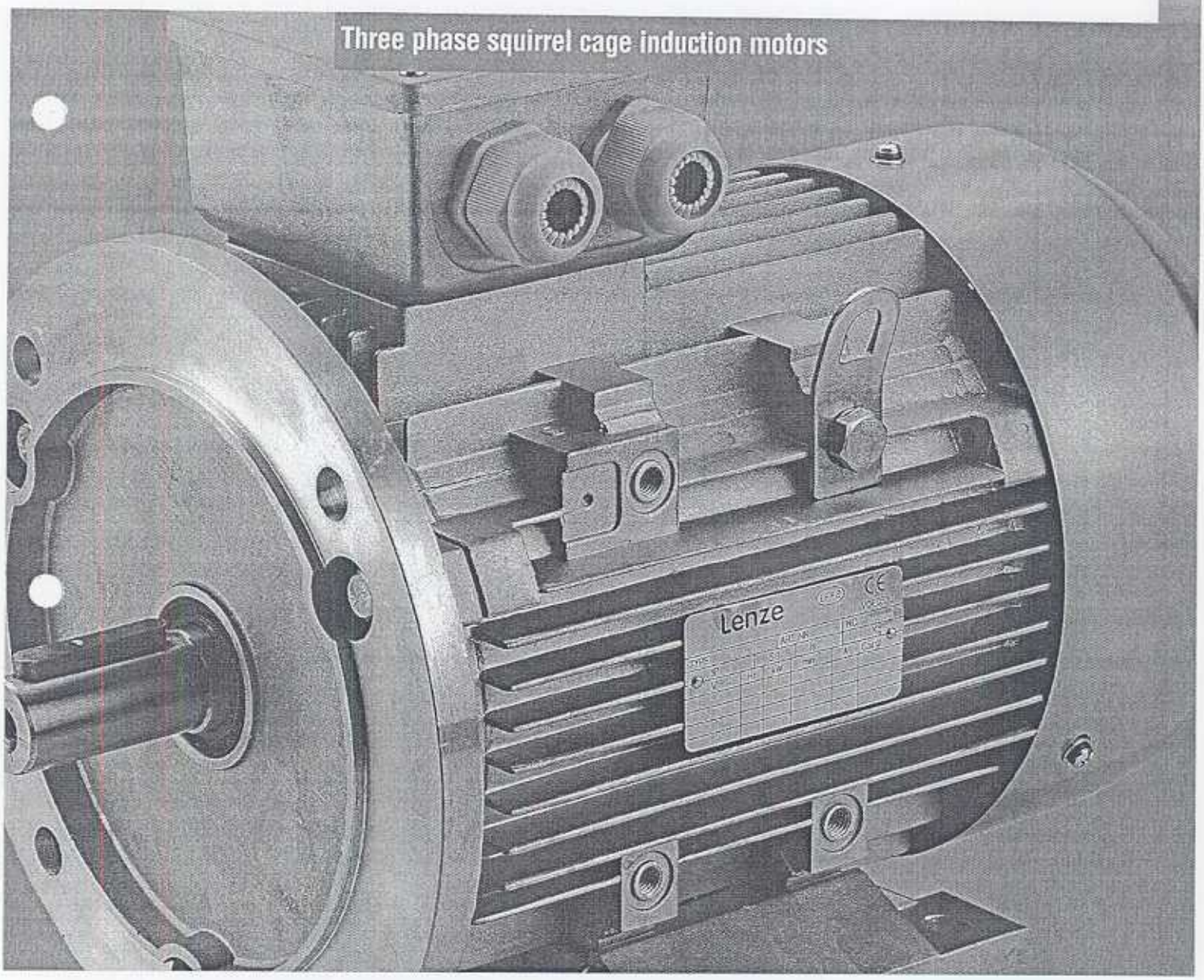

Three phase squirrel cage induction motors

Lenze

ideas in motion

Lenze MDERA ac motors

Text

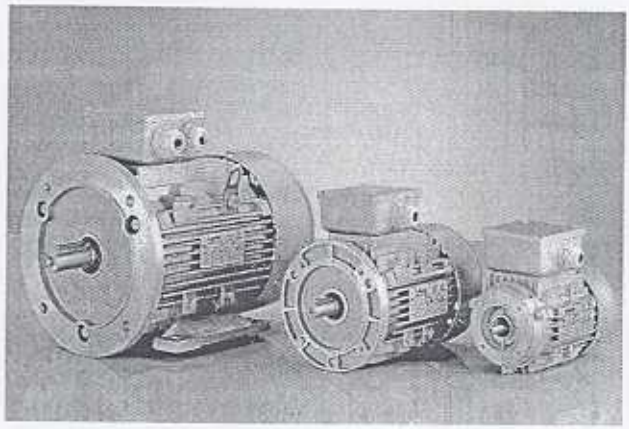

- text
- Text
- Text
- Text
- Text
- Text

Standards

Mountings

Quality

Speeds

Efficiency

Frame sizes

Type codes

M	D	E	R	A					

Lenze 3 phase asynchronous self ventilated motors

Frame size 056 to 035

Motor length code 1,2,3 or 4

Number of pole pairs 1>300r/min 2 = 1500r/min 3 = 1000r/min

Specification

Supply
Designed for operation at nominal voltages 380-415 and rated 400V ± 10%. Other voltages available on request.
Suits operation at 50 or 60Hz. At 60Hz the full load speed increases by 20%, rated torque fulls by 17% and stating torque by about 30%. Rated power remains the same.

Efficiency
To the level Eff2 defined by CEMEP and the European Commission.

Ambient conditions
Ambient temperatures between -15 and +40°C and sites up to 1000m a.s.l. Derates apply outside these limits.
Enclosure class IP55 with insulation to class F.
Maximum voltage amplitude u = 1.5kV
Maximum rate of voltage rise 5kV/µs

Protection
Rated for continuous duty S1.
Aluminium framed motors have a Klixon thermal switch. Cast Iron framed motors are fitted with three PTC thermistors in the windings.
Derating may be neccessary for continuous running with inverters below 20-25Hz.

Paint
Aluminium framed motors are supplied unpainted.
Cast iron motors are painted basalt grey RAL7012.

Construction standards
Designed and constructed meeting the European Directives for Low Voltage, Machinery and EMC.
Complies with relevent IEC, BS, VDE and DIN standards.
CE marked
Lenze is certified to ISO9001:2000

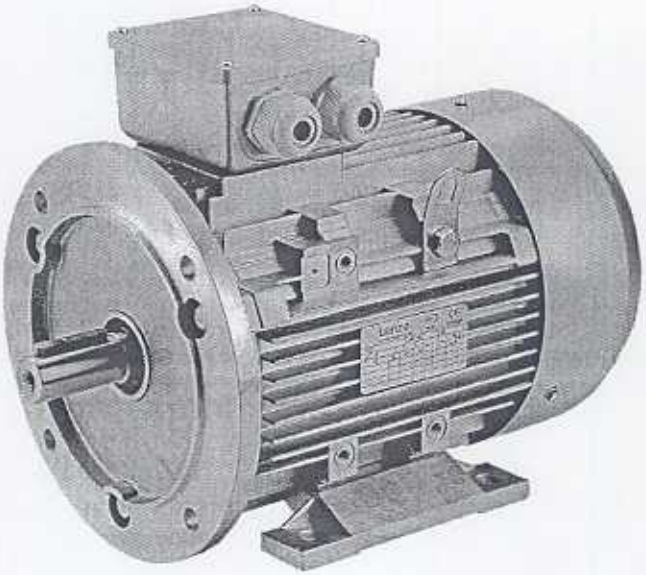

Materials

Terminal boxes/cable glands

Derating

Star/Delta starting

Operation at 60Hz

Lenze MDERA | Speed 3000rpm 400V 2-pole 50Hz

Type MDERA	Output kW	Speed r/min	In A 380V	In A 415V	Efficiency 100%	Efficiency 75%	Efficiency 50%	Power factor 100%	Power factor 75%	Power factor 50%	Tn Nm	Ts/Tn	Tmax/Tn	Is/In	Moment J kgm²	Noise Lw dB	Weight Kg
Aluminium framed																	
056-11	0.09	2750	0.29	0.26	62.0	61.0	57.0	0.77	0.71	0.64	0.31	2.1	2.2	5.2	0.00018	57	3.6
056-21	0.12	2750	0.37	0.33	64.0	63.5	59.0	0.78	0.73	0.65	0.41	2.1	2.2	5.2	0.00023	57	3.9
063-11	0.18	2720	0.53	0.49	65.0	64.0	60.0	0.80	0.73	0.66	0.61	2.2	2.3	5.5	0.00031	58	4.8
063-21	0.25	2720	0.69	0.63	68.0	68.5	66.0	0.81	0.74	0.67	0.96	2.2	2.3	5.5	0.00060	58	5.1
071-11	0.37	2740	0.99	0.91	70.0	71.0	68.5	0.81	0.75	0.66	1.26	2.2	2.3	6.1	0.00075	61	6.0
071-21	0.55	2740	1.40	1.28	73.0	73.0	69.5	0.82	0.76	0.69	1.88	2.2	2.3	6.1	0.00090	61	6.5
080-11	0.75	2840	1.83	1.68	75.0	75.7	72.3	0.83	0.78	0.67	2.54	2.2	2.3	6.1	0.00120	64	8.7
080-21	1.1	2840	2.58	2.36	78.0	80.0	78.2	0.84	0.82	0.72	3.72	2.2	2.3	7.0	0.00140	64	9.5
090-11	1.5	2840	3.43	3.14	80.4	80.2	77.3	0.84	0.80	0.70	5.04	2.2	2.3	7.0	0.0029	69	11.8
090-31	2.2	2840	4.85	4.44	82.0	82.7	81.6	0.85	0.84	0.74	7.40	2.2	2.3	7.0	0.0055	69	13.5
100-31	3.0	2860	6.31	5.78	83.5	83.4	81.3	0.88	0.85	0.76	9.95	2.2	2.3	7.5	0.0109	73	21.0
112-21	4.0	2880	8.10	7.42	85.7	85.5	83.5	0.88	0.85	0.76	13.2	2.2	2.3	7.5	0.0126	74	28.0
132-11	5.5	2900	11.0	10.0	86.9	84.5	81.5	0.88	0.88	0.82	18.1	2.2	2.3	7.5	0.0377	77	39.0
132-21	7.5	2900	14.9	13.6	88.0	86.9	85.3	0.88	0.89	0.84	24.7	2.2	2.3	7.5	0.0499	77	44.5
160-11	11	2930	20.8	19.0	89.3	88.2	87.4	0.90	0.86	0.76	35.8	2.2	2.3	7.5	0.0550	83	69.2
160-21	15	2930	28.1	25.7	90.2	89.8	89.3	0.90	0.87	0.80	48.9	2.2	2.3	7.5	0.0750	83	78.0
160-31	18.5	2930	34.0	31.1	91.0	90.6	89.6	0.91	0.87	0.80	60.3	2.2	2.3	7.5	0.1240	83	88.5
Cast iron framed																	
160-11	11	2930	20.2		88.4	87.4	85.3	0.89	0.87	0.83	35.9	2.2	2.3	7.5	0.0377	86	110
160.21	15	2930	27.4		89.4	88.5	86.2	0.89	0.88	0.83	18.9	2.2	2.3	7.5	0.0499	86	120
160.31	18.5	2930	32.9		90.5	92.2	88.6	0.91	0.90	0.87	60.3	2.0	2.3	7.5	0.055	86	135
180-21	22	2940			90.5	89.9	87.7	0.90	0.89	0.85	71.5	2.0	2.3	7.5	0.075	89	165
200-31	30	2950			91.4	90.3	87.7	0.85	0.83	0.75	97.1	2.0	2.3	7.5	0.124	92	218
200-41	37	2950			92.0	91.2	89.3	0.89	0.87	0.81	119	2.0	2.3	7.5	0.139	92	230
225-21	45	2970			92.5	90.9	88.4	0.89	0.88	0.84	145	2.0	2.3	7.5	0.233	92	280
250-21	55	2970			93.0	91.9	89.2	0.89	0.84	0.78	177	2.0	2.3	7.5	0.312	93	365
280-11	75	2970			93.6	93.1	81.5	0.86	0.88	0.84	241	2.0	2.3	7.5	0.579	94	495
280-21	90	2970			94.1	93.1	92.1	0.90	0.87	0.85	289	2.0	2.3	7.1	0.675	94	565
315-11	110	2980			94.4	93.4	93.9	92.4	0.90	0.82	353	1.8	2.2	7.1	1.18	96	890
315-21	132	2980			94.8	94.3	92.8	0.90	0.85	0.80	423	1.8	2.2	7.1	1.82	96	980
315-31	160	2980			95.0	94.5	93.0	0.88	0.88	0.82	513	1.8	2.2	7.1	2.08	99	1055
315-41	200	2980			95.0	94.5	93.0	0.91	0.88	0.82	641	1.8	2.2	7.1	2.38	99	1110
355-21	250	2985			95.0	94.0	92.5	0.90	0.88	0.81	800	1.8	2.2	7.1	3.00	103	1900
355-31	315	2985			95.2	95.2	94.0	0.91	0.89	0.81	1008	1.8	2.2	7.1	3.50	103	2300

Notes

$\frac{Ts}{Tn}$ Ratio of stall torque to nominal torque, denotes torque at zero speed.

$\frac{Tmax}{Tn}$ Ratio of maximum torque to nominal torque, denotes the acceleration torque available from a dynamic motor.

$\frac{Ts}{In}$ Ratio of current at stall to nominal current.

Lenze MDERA | Speed 1500rpm 400V 4-pole 50Hz

Type MDERA	Output kW	Speed r/min	In A 380V	In A 415V	Efficiency 100%	Efficiency 75%	Efficiency 50%	Power factor 100%	Power factor 75%	Power factor 50%	Tn Nm	Ts/Tn	Tmax/Tn	Is/In	Moment J kgm²	Noise Lw dB	Weight Kg
Aluminium framed																	
056-12	0.06	1325	0.23	0.21	56.0	55.6	52.0	0.70	0.61	0.54	0.43	2.0	2.1	4.0	0.0003	48	3.6
056-22	0.09	1325	0.33	0.30	58.0	58.2	54.5	0.72	0.62	0.55	0.64	2.0	2.1	4.0	0.0004	48	3.9
063-12	0.12	1310	0.44	0.40	57.0	58.2	54.0	0.72	0.63	0.57	0.84	2.1	2.2	4.4	0.0005	48	4.8
063-22	0.18	1310	0.62	0.57	60.0	60.9	55.5	0.73	0.65	0.57	1.26	2.1	2.2	4.4	0.0006	48	5.1
071-12	0.25	1330	0.79	0.72	65.0	65.4	60.0	0.74	0.65	0.58	1.73	2.1	2.2	5.2	0.0008	53	6.0
071-22	0.37	1330	1.11	1.03	67.0	71.0	68.4	0.75	0.65	0.52	2.56	2.1	2.2	5.2	0.0013	53	6.3
080-12	0.55	1390	1.57	1.44	71.0	72.6	69.0	0.75	0.66	0.55	3.75	2.3	2.3	5.2	0.0018	58	9.4
080-22	0.75	1390	2.03	1.86	73.0	74.2	70.0	0.76	0.65	0.54	5.11	2.3	2.3	6.0	0.0021	58	10.8
090-12	1.1	1390	2.89	2.65	77.0	75.0	77.8	75.0	0.77	0.57	7.50	2.3	2.3	6.0	0.0023	59	12.0
090-32	1.5	1390	3.70	3.39	80.3	78.1	76.7	0.79	0.75	0.64	10.23	2.3	2.3	6.0	0.0027	59	13.8
100-32	2.2	1410	5.16	4.72	81.8	83.0	81.1	0.81	0.76	0.65	14.80	2.3	2.3	7.0	0.0054	61	20.8
100-42	3.0	1410	6.78	6.21	83.4	83.2	81.6	0.82	0.78	0.66	20.18	2.3	2.3	7.0	0.0067	61	23.5
112-22	4.0	1435	8.8	8.1	84.9	84.8	82.7	0.82	0.76	0.64	26.53	2.3	2.3	7.0	0.0095	62	29.5
132-22	5.5	1440	11.0	10.8	86.5	86.8	85.6	0.83	0.81	0.71	36.48	2.3	2.3	7.0	0.0214	69	41.0
132-32	7.5	1440	15.6	14.3	87.8	88.2	87.2	0.84	0.83	0.74	49.7	2.3	2.3	7.0	0.0296	69	47.5
160-22	11	1460	20.0	20.1	99.5	87.5	84.2	0.85	0.81	0.74	71.6	2.3	2.3	7.0	0.0747	72	72.5
160-32	15	1460	29.6	27.1	90.6	89.2	88.7	0.85	0.82	0.75	98.1	2.3	2.3	7.0	0.0918	72	85.6
Cast iron framed																	
160-22	11	1460	20.0	20.1	89.2	89.2	87.8	0.85	0.83	0.75	71.6	2.2	2.3	7.0	0.0747	75	118
160-32	15	1470	29.6	27.1	89.7	89.7	88.4	0.85	0.82	0.75	98.1	2.2	2.3	7.5	0.0918	75	132
180-22	18.5	1470			90.7	90.6	89.2	0.89	0.86	0.77	120	2.2	2.3	7.5	0.139	76	164
180-32	22	1480			91.6	91.7	90.7	0.88	0.85	0.75	143	2.2	2.3	7.5	0.158	76	182
200-32	30	1480			92.6	92.4	91.6	0.87	0.84	0.75	161	2.2	2.3	7.2	0.262	79	245
225-12	37	1480			92.8	92.7	91.5	0.87	0.84	0.75	199	2.2	2.3	7.2	0.406	81	258
225-22	45	1480			93.4	93.3	92.5	0.89	0.87	0.81	290	2.2	2.3	7.2	0.469	81	290
250-22	55	1480			94.0	94.2	93.6	0.89	0.88	0.82	355	2.2	2.3	7.2	0.66	83	388
280-12	75	1480			94.0	93.5	92.0	0.91	0.89	0.84	484	2.2	2.3	7.2	1.12	86	510
280-22	90	1485			94.0	93.5	91.8	0.88	0.86	0.80	579	2.2	2.3	7.2	1.46	86	606
315-12	110	1485			94.4	93.5	91.4	0.88	0.87	0.81	707	2.1	2.2	6.9	3.11	93	910
315-22	132	1485			94.8	94.8	93.3	0.91	0.88	0.82	849	2.1	2.2	6.9	3.62	93	100
315-32	160	1485			95.0	64.5	93.5	0.88	0.85	0.78	1029	2.1	2.2	6.9	4.13	97	1055
315-42	200	1485			95.0	94.1	92.7	0.89	0.87	0.81	1286	2.1	2.2	6.9	4.73	97	1128
355-22	250	1490			95.0	94.4	93.4	0.89	0.87	0.79	1602	2.1	2.2	6.9	6.5	101	1900
355-32	315	1490			95.0	95.0	93.4	0.88	0.86	0.79	2019	2.1	2.2	6.9	8.2	101	1900

Stock availability

Aluminium framed				
Frame MDERA	Output kW	B3 foot	B5 flange	B14* face
56 1-4	0.06			
56 2-4	0.09			
63 1-4	0.12			
63 2-4	0.18			
71 1-4	0.25			
71 2-4	0.37			
80 1-4	0.55			
80 2-4	0.75			
90 S-4	1.1			
90 L-4	1.5			
100 L1-4	2.2			
100 L2-4	3.0			
112 M-4	4.0			
132 S-4	5.5			
132 M-4	7.5			
160 M2-4	11			
160 L-4	15	Ask for lead times		

Cast Iron framed				
Frame MDERA	Output kW	B3 foot	B5 flange	B14 face
160 M-4	11			
160 L-4	15			
180 M-4	18.5			
180 L-4	22			
200 L-4	30			
225 S-4	37			
225 S-4	45			
250 M-A	55			
280 S-4	75			
280 M-4	90			
315 S-4	110			
315 M-4	132			
315 L1-4	160	Ask for lead times		
315 L2-4	200			
355 M-4	250			
355 L-4	315			

* See dimensions on page 9.

Lenze MDERA | Speed 1000rpm 400V 6-pole 50Hz

Type MDERA	Output kW	Speed r/min	In A 380V	In A 415V	Efficiency 100%	Efficiency 75%	Efficiency 50%	Power factor 100%	Power factor 75%	Power factor 50%	Tn Nm	Ts/Tn	Tmax/Tn	Is/In	Moment J kgm²	Noise Lw dB	Weight Kg
Aluminium framed																	
063-13	0.09	840	0.62	0.47	44.0	43.0	39.0	0.60	0.53	0.44	1.80	1.8	1.9	3.5	0.00025	48	4.8
063-23	0.12	840	0.74	0.57	48.0	47.0	42.0	0.60	0.53	0.44	2.25	1.8	1.9	3.5	0.00040	48	5.1
071-13	0.18	850	0.80	0.70	56.0	56.0	52.0	0.66	0.58	0.47	1.91	1.9	2.0	4.0	0.00110	49	6.0
071-23	0.25	850	0.95	0.90	59.0	59.0	55.0	0.68	0.58	0.47	2.65	1.9	2.0	4.0	0.00140	49	6.3
080-13	0.37	885	1.30	1.24	62.0	62.0	59.0	0.70	0.60	0.48	3.9	1.9	2.0	4.7	0.00160	51	8.9
080-23	0.55	885	1.79	1.70	65.0	67.0	65.0	0.72	0.64	0.51	5.8	1.9	2.1	4.7	0.00190	51	10.4
090-13	0.75	910	2.29	1.90	69.0	71.0	69.0	0.72	0.64	0.51	7.9	2.0	2.1	5.5	0.0029	54	12.1
090-33	1.1	910	3.18	2.80	72.0	74.0	73.0	0.73	0.65	0.52	11.5	2.0	2.1	5.5	0.0035	54	13.7
100-33	1.5	920	3.94	3.40	76.0	77.0	75.0	0.75	0.69	0.55	15.2	2.0	2.1	5.5	0.0069	58	23.0
112-23	2.2	935	5.6	4.9	79.0	81.0	80.0	0.76	0.69	0.56	22.3	2.1	2.1	6.5	0.0140	62	28.2
132-33	3.0	960	7.4	6.5	81.0	82.5	80.0	0.76	0.67	0.54	29.8	2.1	2.1	6.5	0.0286	66	40.3
123-33	4.0	960	9.8	8.5	82.0	84.0	83.0	0.76	0.70	0.57	39.8	2.1	2.1	6.5	0.0357	66	43.0
132-43	5.5	960	12.9	11.5	84.0	85.0	84.0	0.77	0.72	0.60	54.7	2.1	2.1	6.5	0.0449	66	47.2
160-23	7.5	970	17.0	14.6	87.0	87.0	86.5	0.78	0.76	0.64	73.8	2.1	2.1	6.5	0.081	70	70.6
160-33	11	970	24.2	21.0	88.3	89.0	88.0	0.80	0.70	0.64	108	2.1	2.1	6.5	0.116	70	85.0
Cast iron framed																	
160-23	7.5	970	17.0	14.6	87.0	87.0	85.5	0.76	0.71	0.60	73.8	2.0	2.1	6.5	0.081	73	118
160-33	11	970	24.2	21.0	89.0	89.5	89.0	0.78	0.73	0.70	108	2.0	2.1	6.5	0.116	73	145
180-33	15	970			89.1	89.1	87.8	0.84	0.79	0.67	148	2.1	2.1	7.0	0.207	73	178
200-33	18.5	970			90.0	90.2	88.9	0.82	0.78	0.67	182	2.1	2.0	7.01	0.315	76	200
200-43	22	970			90.1	90.1	88.6	0.83	0.78	0.71	217	2.1	2.0	7.0	0.36	76	228
225-23	30	980			91.1	91.5	90.2	0.86	0.79	0.79	292	2.0	2.0	7.0	0.547	76	265
250-23	37	980			92.8	92.8	91.8	0.86	0.86	0.76	361	2.1	2.0	7.0	0.843	78	370
280-13	45	980			93.0	92.5	91.5	0.87	0.83	0.77	439	2.1	2.0	7.0	1.39	80	490
280-23	55	980			93.0	92.5	91.5	0.88	0.85	0.78	536	2.1	2.0	7.0	1.65	80	540
315-13	75	980			94.0	93.5	92.0	0.88	0.85	0.78	731	2.0	2.0	7.0	4.11	85	900
315-23	90	161			94.0	93.5	92.0	0.86	0.85	0.78	873	2.0	2.0	6.7	4.78	85	980
315-33	110	985			94.3	93.9	92.5	0.86	0.84	0.77	1066	2.0	2.0	6.7	5.45	85	1045
315-33	132	985			94.7	94.2	93.0	0.87	0.84	0.77	1280	2.0	2.0	6.7	6.12	85	1100
355-13	160	990			94.9	94.2	93.0	0.87	0.84	0.77	1543	1.9	2.0	6.7	9.5	92	1550
355-23	200	990			94.9	94.5	93.7	0.89	0.87	0.83	1913	1.9	2.0	6.7	10.4	92	1700
355-33	250	990			95.0	95.0	94.0	0.88	0.86	0.80	2412	1.9	2.0	6.7	12.4	92	1700

Notes

$\frac{Ts}{Tn}$ Ratio of stall torque to nominal torque, denotes torque at zero speed.

$\frac{Tmax}{Tn}$ Ratio of maximum torque to nominal torque, denotes the acceleration torque available from a dynamic motor.

$\frac{Ts}{In}$ Ratio of current at stall to nominal current.

Lenze MDERA | Radial & axial loads

Radial and axial forces should not be applied together at their maximum values.

Forces are given in N.

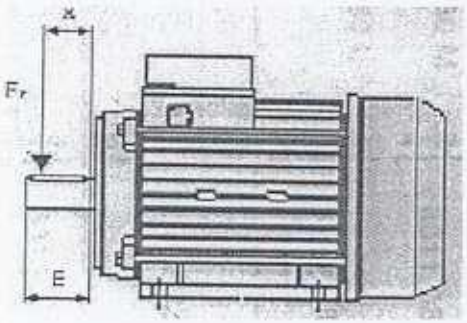

Aluminium framed				
Frame MDERA	Poles	$F_{r\,max}$ x = E	$F_{r\,max}$ x = 0	$F_{a\,max}$
56	2	250	300	250
	4	325	400	350
63	2	275	325	350
	4	350	400	350
71	2	300	375	300
	4	375	450	400
80	2	500	625	475
	4	625	775	625
90S	2	525	675	500
	4	675	875	675
	6	775	1000	825
90L	2	550	700	500
	4	700	875	675
	6	825	1025	825
100L	2	775	7000	700
	4	1000	1250	950
	6	1150	1425	1125
112M	2	775	975	700
	4	975	1225	950
	6	1125	1400	1125
132S	2	1150	1475	1075
	4	1450	1850	1450
	6	1650	2125	1725
132M	2	1200	1500	1075
	4	1500	1900	1450
	6	1725	2175	1725

Cast iron framed				
Frame MDERA	Poles	$F_{r\,max}$ x = E	$F_{r\,max}$ x = 0	$F_{a\,max}$
160M	2	2000	2600	2150
	4	2525	3275	2850
	6	2900	3750	2850
160L	2	2100	2650	2150
	4	2650	3350	2850
	6	3025	3850	2850
180M	2	2925	3675	2900
	4	3700	4650	3800
180L	4	3800	4700	3800
	6	4350	5375	4525
200L	2	3450	4200	3325
	4	4350	5300	4350
	6	4975	6075	5150
225S	4	4600	5875	4900
225M	2	3875	4700	3725
	4	4675	5925	4900
	6	5350	6775	5775
250M	2	4325	5350	4175
	4	5450	6750	5500
	6	6250	7725	6500
280S	2	4350	5300	4175
	4	7025	8550	6900
	6	8250	9800	9125
280M	2	4475	5375	4175
	4	7200	8650	6900
	6	8250	9925	8125
315S	2	5850	6875	5175
	4	10000	21000	7875
	6	10000	24000	9225
315M-L	2	6050	7000	5175
	4	9000	22000	7875
	6	9000	24000	9225
355M-L	2	7250	8175	5875
	4	11500	27000	10075
	6	1150	27000	11950

Bearing size

Aluminium framed		
Frame	Bearings	
63	6201	2RS-C3
71	6202	2RS-C3
80	6204	2RS-C3
90	6205	2RS-C3
100	6206	2RS-C3
112	6206	2RS-C3
132	6208	2RS-C3
160	6209	2RS-C3

Cast iron framed	
Frame	Bearings
160	6309-C3
180	6311-C3
200	6312-C3
225	6313-C3
250	6314-C3
280 2 pole	6314-C3
280 4,6 pole	6317-C3
larger sizes on request	

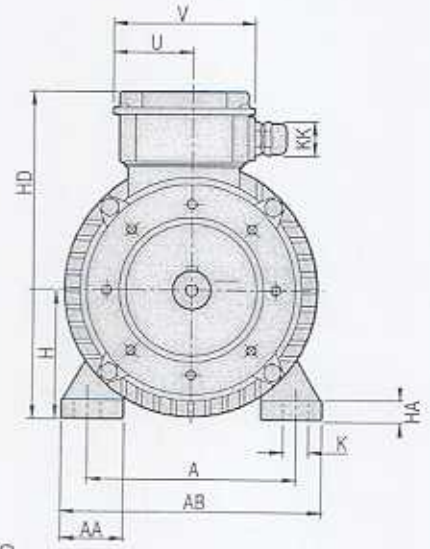
V
U
KK
HD
H
HA
K
A
AB
AA

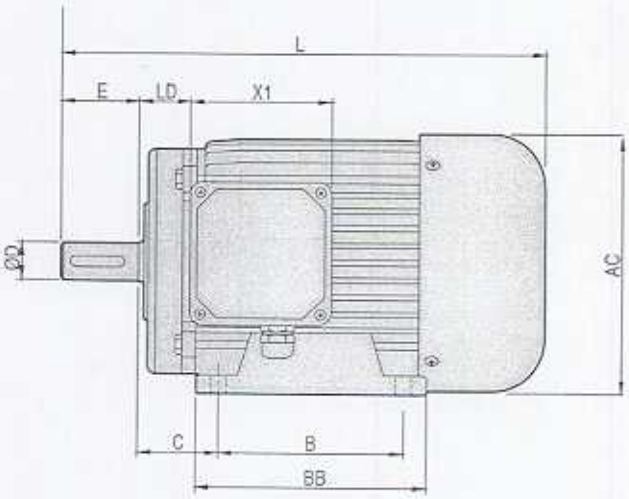
L
E
LD
X1
ØD
AC
C
B
BB

B3

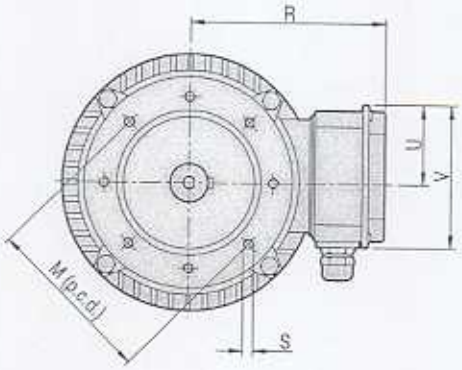
R
U
V
M (p.c.d)
S

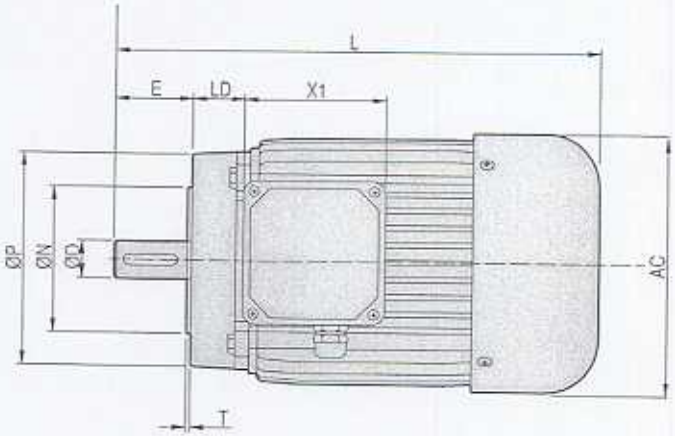
L
E
LD
X1
ØP
ØN
ØD
AC
T

B14

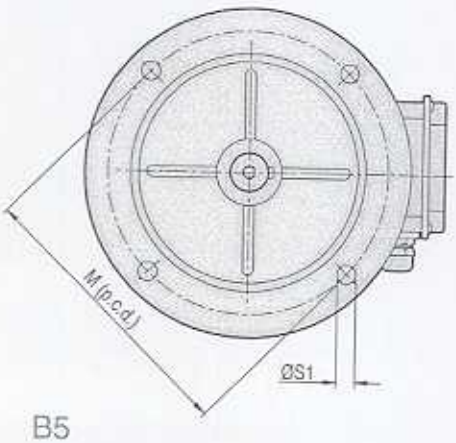
M (p.c.d)
ØS1

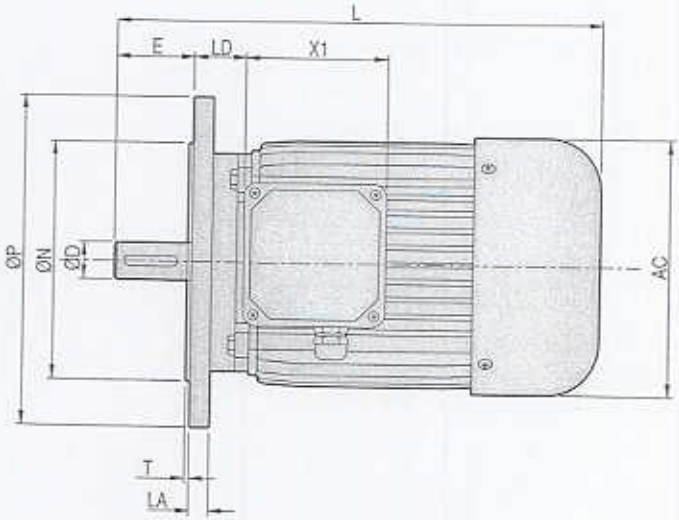
L
E
LD
X1
ØP
ØN
ØD
AC
T
LA

B5

Frame	General					Feet								Terminal box					
	AC	D	E	H	L	A	AA	AB	B	BB	C	HA	K	HD	LD	X1	U	V	KK
56	110	9	20	56	199	90	23	115	71	88	36	7	5.8	156					2xM20x1.5
63	130	11	23	63	217	100	24	135	80	100	40	7	7.0	111					2xM20x1.5
71	145	14	30	71	245	112	26	150	90	110	45	8	7.0	118					2xM20x1.5
80	175	19	40	80	287	125	35	165	100	125	50	9	10.0	134					2xM25x1.5
90S 90L	195	24	50	90	315 340	140	37	180	125	150	56	10	10	230					2xM25x1.5
100L	215	28	60	100	385	160	40	205	140	172	63	11	12.0	160					2xM32x1.5
112M	240	28	60	112	400	190	41	230	181	140	70	12	12.0	178					2xM32x1.5
132S	275	38	80	132	483	216	51	270	140	186	89	15	12.0	206					2xM32x1.5
132M					510				178	224									2xM32x1.5
160M 160L	330	42	110	160	615 670	254	54	320	210 254	260 304	42	18	15	415					2xM40x1.5

Frame	B5 mounting						B14 mounting						Alternative B14 mounting (on request)					
	M	N	P	S	T	LA	M	N	P	S	T	LA	M	N	P	S	T	LA
56	100	80	120	120	3.0		65	50	80	M5	2.5		85	70	105	M6	2.5	
63	115	95	140	140	3.0		75	60	90	M5	2.5		100	80	120	M6	2.5	
71	85	70	105	M6	2.5		85	70	105	M6	2.5		115	95	140	M8	3.0	
80	100	80	120	M6	3.0		100	80	120	M6	3.0		130	110	160	M8	3.5	
90S,L	165	130	200	200	3.5		115	95	140	M8	3.0		130	110	160	M8	3.5	
100L	130	110	160	M8	3.5		130	110	160	M8	3.5		165	130	200	M10	3.5	
112M	130	110	160	M8	3.5		130	110	160	M8	3.5		165	130	200	M10	3.5	
132S,M	165	130	200	M10	3.5		165	130	200	M10	3.5		215	180	250	M12	4.0	
160M,L	300	250	350	350	5.0		215	180	250	M12	4.0		265	230	300	M16	5.0	

Frame	Shaft and keyway					
	D	E	F	G	GD	DH
56	9	20	3	7.2		M4x12
63	11	23	4	8.5		M4x12
71	14	30	5	11		M5x12
80	19	40	6	15.5		M6x16
90S,L	24	50	8	20.0		M8x19
100L 112M	28	60	8	24.0		M10x22
132S,M	38	80	10	33.0		M12x28
160M,L	42	110	12	37.0		M16x36

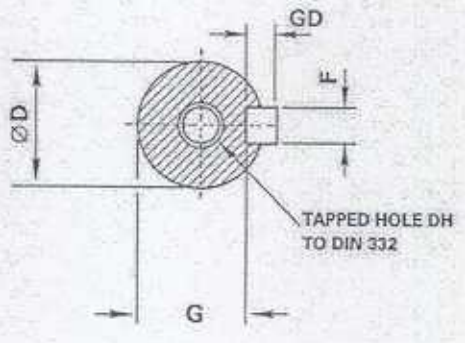

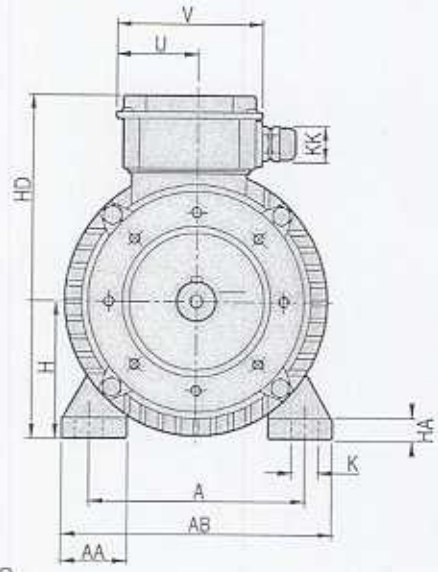
V
U
KK
HD
H
HA
K
A
AB
AA

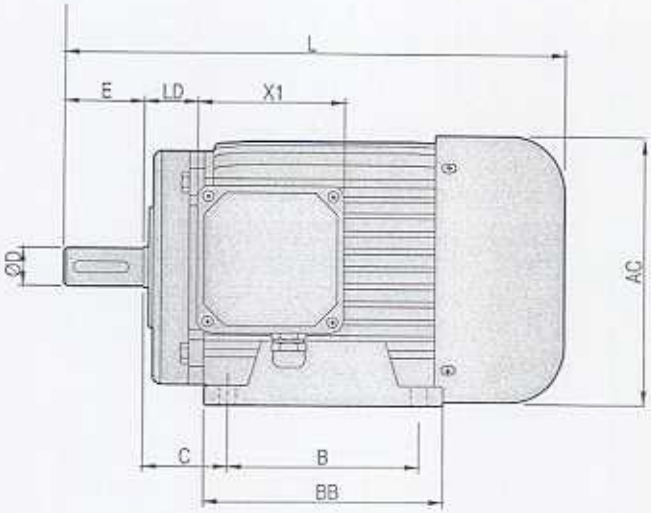
L
E
LD
X1
ØD
AC
C
B
BB

B3

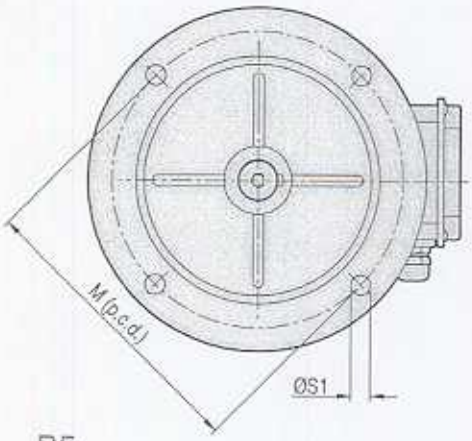
M (p.c.d.)
ØS1

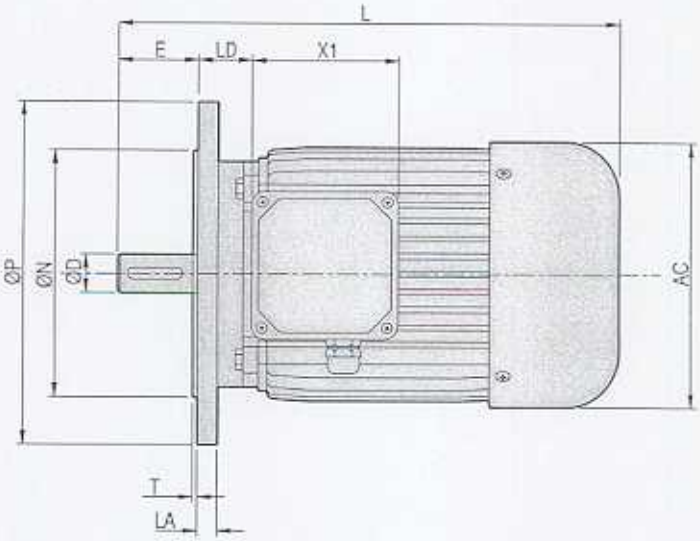
L
E
LD
X1
ØP
ØN
ØD
AC
T
LA

B5

Frame	Number of poles	General			Feet								Terminal box						
		AC	H	L	A	AA	AB	B	BB	C	HA	K	HD	HE	LD	X1	U	V	KK
160M	2			615				210			20								
160M	4,6	315	160	615	254	65	320	210	260	108	20	15	420	?	146	?	?	?	?
160L	2			670				254			22								
160L	4, 6			670				254			22								
180M	2			700				241	311		25				138.5				
180M	4.6	355	180	740	279	70	365	279	349	121	28	15	455	?	136.5	?	?	?	?
180L	4.6			740				279	349		28				139.5				
200L	2	397	200	770	318	70	395	305	369	133	30	19	505	?	149.5	?	?	?	?
200L	4.6														158.5				
225S	4			815				286	368						156.5				
225M	2	445	225	820	356	75	435	311	404	149	28	19	555	?	154.5	?	?	?	?
225M	4.6			845				311	404						156.5				
250M	2	370	250	910	406	80	490	349	445	168	30	24	615	?	170.5	?	?	?	?
250M	4.6														172.5				
280S	2			985				368	485						170.5				
280S	4.6	547	280	985	457	85	550	363	485	190	35	24	680	?	179.0	?	?	?	?
280M	2			1035				419	536						170.5				
280M	4.6			1035				419	536						179				
315S	2			1160				406	570										
315S	4.6			1270				406	570										
315M	2	620	315	1190	508	120	635	457	680	216	45	28	845	?	211	?	?	?	?
315M	4.6			1300				457	680										
315L	2			1190				508	680										
315L	4.6			1300				508	680										
355M	2			1500				560	760										
355M	4.6	698	355	1530	610	116	730	560	760	254	52	28	1010	?	234	?	?	?	?
355L	2			1500				630	760										
355L	4.6			1530				630	760										

Frame	B5 Mounting					
	M	N	P	S	T	LA
160M,L	300	250	350	19	5	?
180M,L	300	250	350	19	5	?
200L	350	300	400	18	5	?
225S,M	400	350	450	19	5	?
250M	500	450	550	19	5	?
280S	500	450	550	19	5	?
315S,M	600	550	660	24	6	?
355M,L	740	680	800	0	24	?

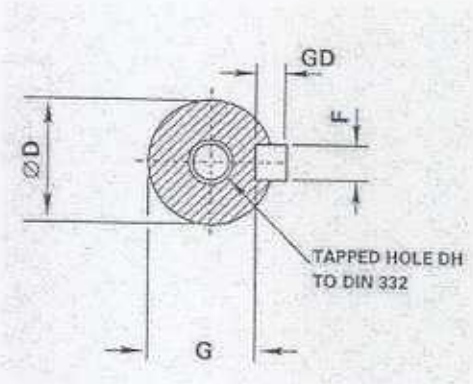

- 180-200 frame, 4 equispaced holes starting 45° from vertical
- 225-355 frame, 8 equispaced holes starting 22.5° from vertical

Shaft and keyway

Frame	2 pole						4 & 6 pole					
	D	E	F	G	GD	GH	D	E	F	G	GD	GH
160M,L	42	110	12	37		M16x36	42	110	12	37		M16x36
180M,L	48	110	14	42.5	9	M16x36	48	110	14	42.5	9	M16x36
200L	55	110	16	49	10	M20x42	55	110	16	49	10	M20x42
225S,M	55	110	16	49	10	M20x42	60	140	18	53	11	M20x42
250M	60	140	18	53	11	M20x42	65	140	18	53	12	M20x42
280S,M	65	140	18	58	11	M20x42	75	140	20	67.5	14	M20x42
315S,M,L	65	140	18	58	11	M20x42	80	170	22	71	14	M20x42
350M,L	75	140	20	67.5	12	M20x42	95	170	25	86	16	M20x42

It's good to know | why we are there for you

"Our customers come first. Customer satisfaction is what motivates us. By thinking in terms of how we can add value for our customers we can increase productivity through reliability."

"The world is our marketplace. We develop and manufacture internationally. Wherever you are in the world, we are nearby."

"We will provide you with exactly what you need – perfectly co-ordinated products and solutions with the right functions for your machines and installations. That is what we mean by 'quality'."

"Take advantage of our wealth of expertise. For more than 50 years we have been gathering experience in various fields and implementing it consistently and rigorously in our products, motion functions and preprepared solutions for industry."

"We identify with your targets and strive towards a long-term partnership which benefits both sides. Our competent support and consultation process means that we can provide you with tailor-made solutions. We are there for you and can offer assistance in all of the key processes."

You can rely on our service. Expert advice is available 24 hours a day, 365 days a year, in more than 30 countries via our international helpline: 008000 24 Hours (008000 2446877).

www.Lenze.com

XXXXXXXX

Lenze Drive Systems GmbH · Postfach 10 13 52 · D-31763 Hameln · Technical alterations reserved · Printed in Germany 11.2004 en · 5 4 3 2 1

Lenze MDERA

electric limited